MMT

- XJ -

XLR JACK

TERMINAL TYPE

Pa : PCB TYPE, RIGHT ANGLE TYPE

XLR JACK - RIGHT ANGLE TYPE - Pa

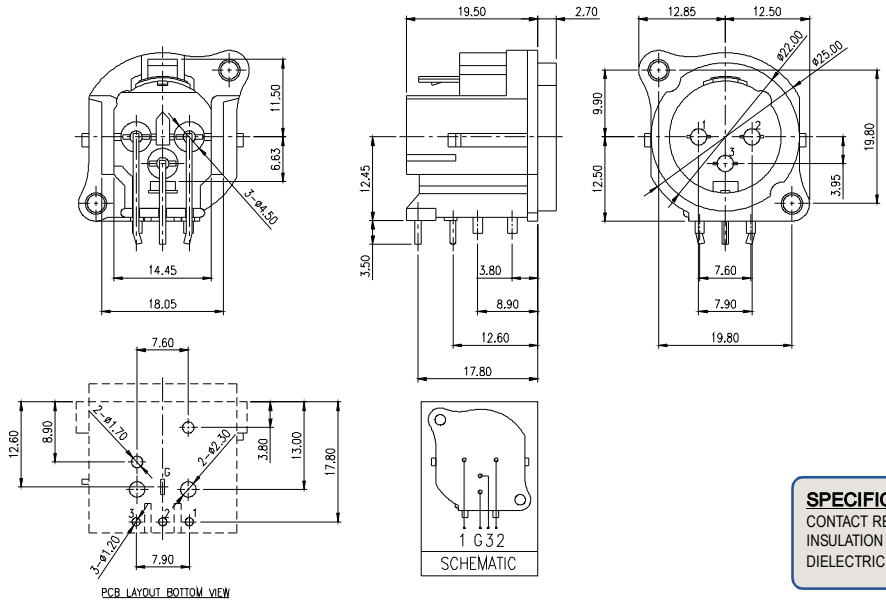

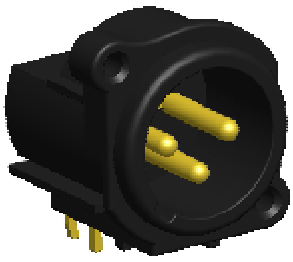

SPECIFICATIONS
CONTACT RESISTANCE: 30MΩ MAX
INSULATION RESISTANCE: 100MΩ MIN AT DC 500V
DIELECTRIC WITHSTAND VOLTAGE: AC 500V FOR ONE MINUTE

XJ	001	-	Pa	M	03	Gf
XLR JACK	SERIES NO.		PCB TYPE Pa: RIGHT ANGLE TYPE	GENDER M: MALE	NO. OF CONTACTS	CONTACT PLATING OPTION Gf: GOLD FLASH ON CONTACT

XLR JACK - RIGHT ANGLE TYPE - Pa

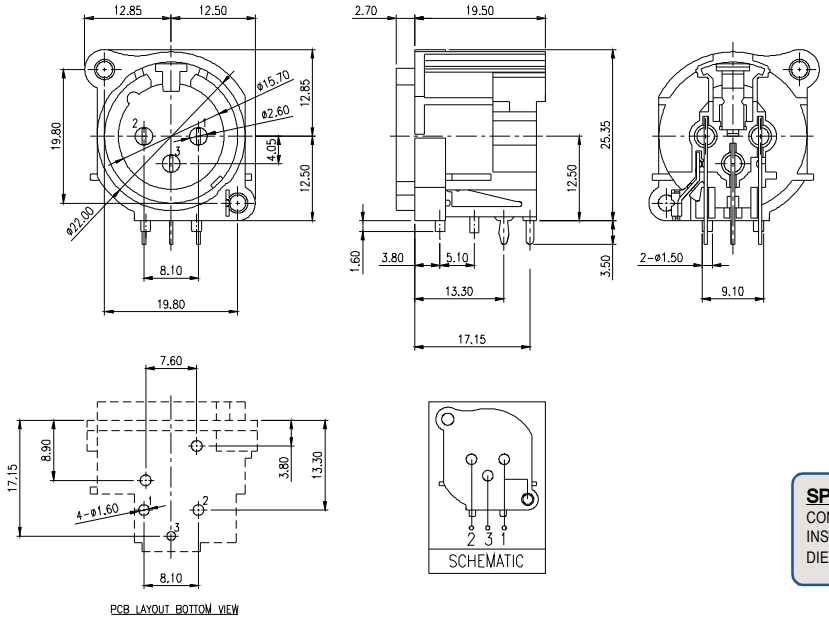

SPECIFICATIONS
CONTACT RESISTANCE: 30MΩ MAX
INSULATION RESISTANCE: 100MΩ MIN AT DC 500V
DIELECTRIC WITHSTAND VOLTAGE: AC 500V FOR ONE MINUTE

XJ	001	-	Pa	F	03	Gf
XLR JACK	SERIES NO.		PCB TYPE Pa: RIGHT ANGLE TYPE	GENDER F: FEMALE	NO. OF CONTACTS	CONTACT PLATING OPTION Gf: GOLD FLASH ON CONTACT

***NOTE** : SOME SIZES, STYLES AND OPTION ARE NON-STANDARD, NON-CANCELLABLE, NON-RETURNABLE*

www.mmtmachrone.com

USA TEL : 1-510-979-2188 FAX : 1-510-979-2189
TAIWAN TEL : 886-2-2755-3193 FAX : 886-2-2784-5109
SINGAPORE TEL : 65-6274-0566 FAX : 65-6274-7891