V1.1 NOTE: THIS DEVICE IS ROHS COMPLIANT.

REVISIONS							
SYM	DESCRIPTION	DATE	APPROVED	SYM	DESCRIPTION	DATE	APPROVED
△				△			
△				△			
**CUSTOMER DRAWING FOR REFERANCE ONLY, SAMPLES APPROVAL ARE REQUIRED!!							481

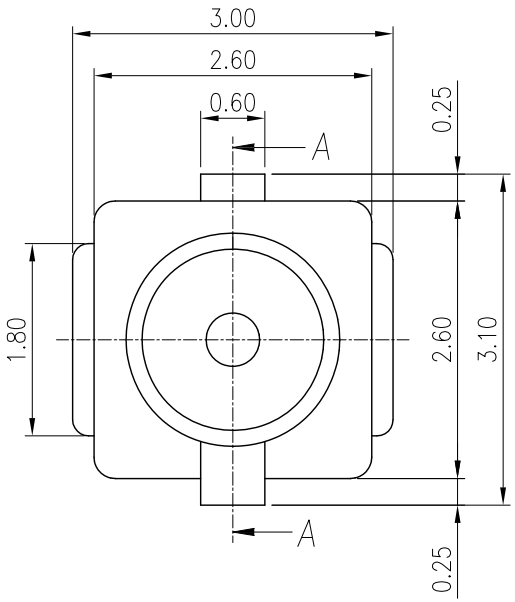

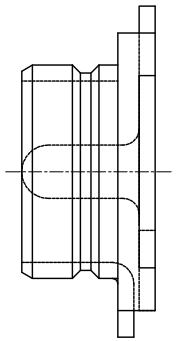

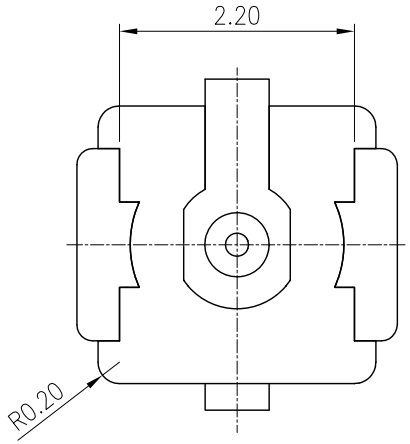

MATERIAL
HOUSING: HIGH TEMPERATURE THERMOPLASTIC, UL94V-0,
COLOR: NATURAL
CENTER CONTACT: COPPER ALLOY, T=0.15mm
GROUND CONTACT: COPPER ALLOY, T=0.15mm

FINISH
CENTER CONTACT: Au PLATING ON CONTACT AREA
50u" MIN. NICKEL UNDER PLATING OVER ALL
GROUND CONTACT: Au OR Ag PLATING ON CONTACT AREA
NICKEL UNDER PLATING OVER ALL

SPECIFICATION
RATED VOLTAGE: AC 60Vrms
FREQUENCY RATING: DC~ 6GHZ
VSWR: 1.3 MAX. AT 0.1~3GHz
SERVICE TEMPERATURE: -40°C~+90°C

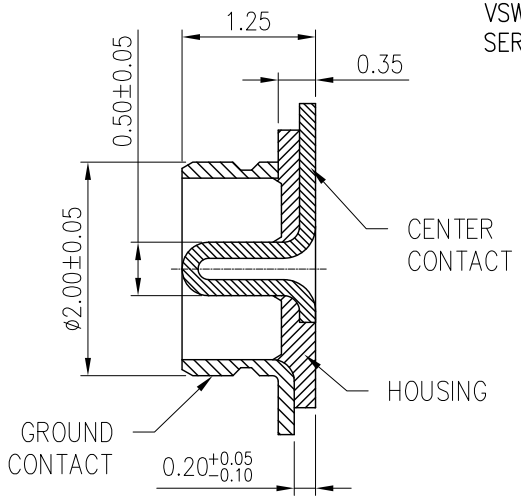

SECTION A-A

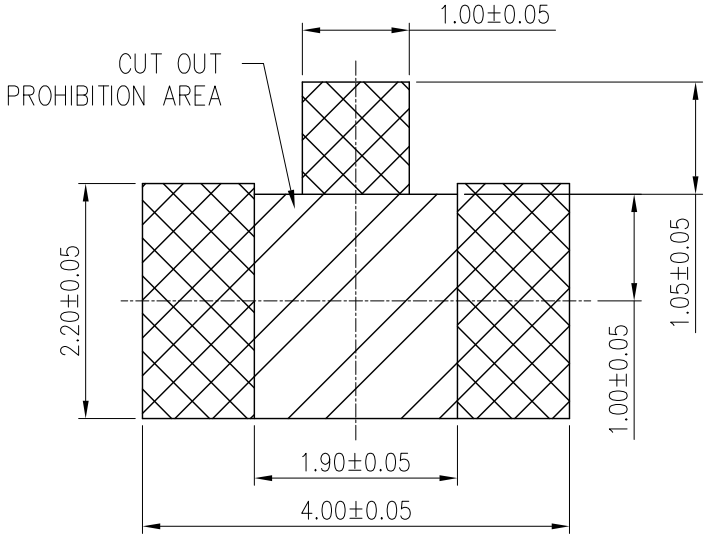

RECOMMENDED FOOTPRINT PATTERN

ORDER INFORMATION:
IRC001A-PtXX
IRC: I-PEX RECEPTACLE CONNECTOR
001A: SERIES NO.
Pt: PCB TYPE, SURFACE MOUNT
X: CENTER CONTACT PLATING OPTION
Gf: GOLD FLASH
G15: Au 15u"
G30: Au 30u"
G: GROUND CONTACT PLATING OPTION
G: GOLD FLASH
Ag; Ag 100u"
G30: Au 30u"

TOLERANCES UNLESS OTHERWISE SPECIFIED ±0.25			SIGNATURES		DATE	MODEL
			DRAWN	AARON	06/JUN/17'	TITLE I-PEX RECEPTACLE
SYMBOL △	UNIT mm	SCALE 15/1	CHECKED	DIANA	06/JUN/17'	NO. IRC001A-Pt__
			APPROVALS			

MMT CORPORATION

TEL:(510)979-2188 www.mmtmachrone.com FAX:(510)979-2189